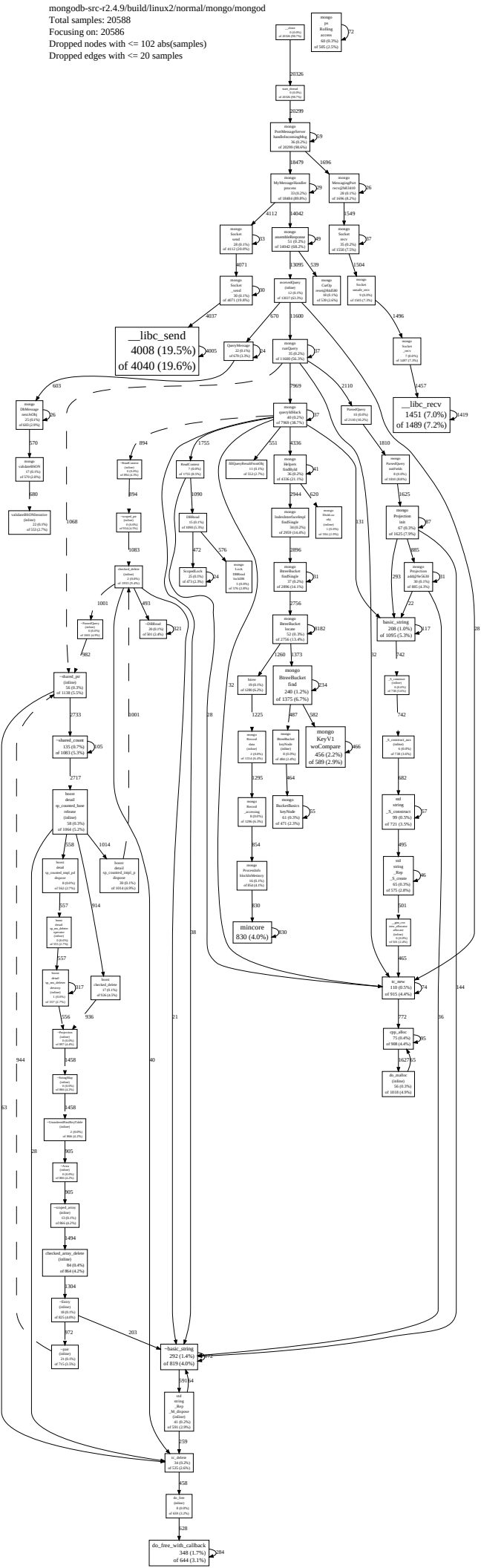mongodb-src-r2.4.9/build/linux2/normal/mongo/mongod
Total samples: 20588
Focusing on: 20586
Dropped nodes with <= 102 abs(samples)
Dropped edges with <= 20 samples